SP-2251 EX1

"TEN" SERVICE MANUAL

CASSETTE TAPE PLAYER

SP-2251EX1

TABLE OF CONTENTS

COMPOSITIONS 1
SPECIFICATIONS, CONNECTIONS 2
SCHEMATIC 3, 4
WIRING ON PC BOARDS 5, 6
ADJUSTMENT 7
EXPLODED VIEW (Tape player) 8
EXPLODED VIEW (Cassette deck) 9
REPLACEMENT PARTS LIST 10

COMPOSITIONS

CASSETTE TAPE PLAYER SP-2251EX1

- Tape player assembly (SP-2251) 1
- Bracket (RN-MBF-11) 1
- Bracket (RN-MBU-144) 1
- Connection and lead assembly (RN-EWJ-416) 1
- Connection and lead assembly (RN-EWJ-3376) 1
- Connection and lead assembly (RN-EWJ-3382) 1
- Installation screw (RN-MWA-622) 1set

FUJITSU TEN LIMITED

SPECIFICATIONS

NUMBER OF TRACKS ····· 4-track 2-channel
TAPE CARTRIDGE ····· Stereo/Monaural compact cassette
TAPE SPEED ····· 4.76 cm/sec. ±3%
TAKE-UP TORQUE ····· 40 to 70 g-cm
WOW & FLUTTER ····· 0.3% or less (WRMS)
CROSSTALK ····· 50 dB or better
SEPARATION ····· 30 dB or better
EQUALIZATION ····· NORM (normal) ····· t1=3,180 μsec, t2=120 μsec
CrO_2 (chrome & metal) ··· t1=3,180 μsec, t2=70 μsec
SIGNAL TO NOISE RATIO ····· 46 dB or better
FREQUENCY RESPONSE ····· 125 Hz: 0±5 dB, 8 kHz: 0±5 dB (at 1 kHz 0.5W output)
SPEAKER IMPEDANCE ····· 4 ohm per channel
POWER OUTPUT ····· 13 watts or better RMS (at T.H.D.=10%) per channel
POWER INPUT ····· 12-volt car battery, negative terminal to ground
Voltage ····· 13.2 VDC
Current ····· Approx. 1.5 ampere (0.5W×2) Max. 5 ampere
SEMICONDUCTOR ····· 5 ICs, 3 transistors, 5 diodes, 2 LEDs
DIMENSIONS ····· 150(W)×50(H)×148(D)mm
Weight ····· 1.3 kg

CONNECTIONS (REAR VIEW)

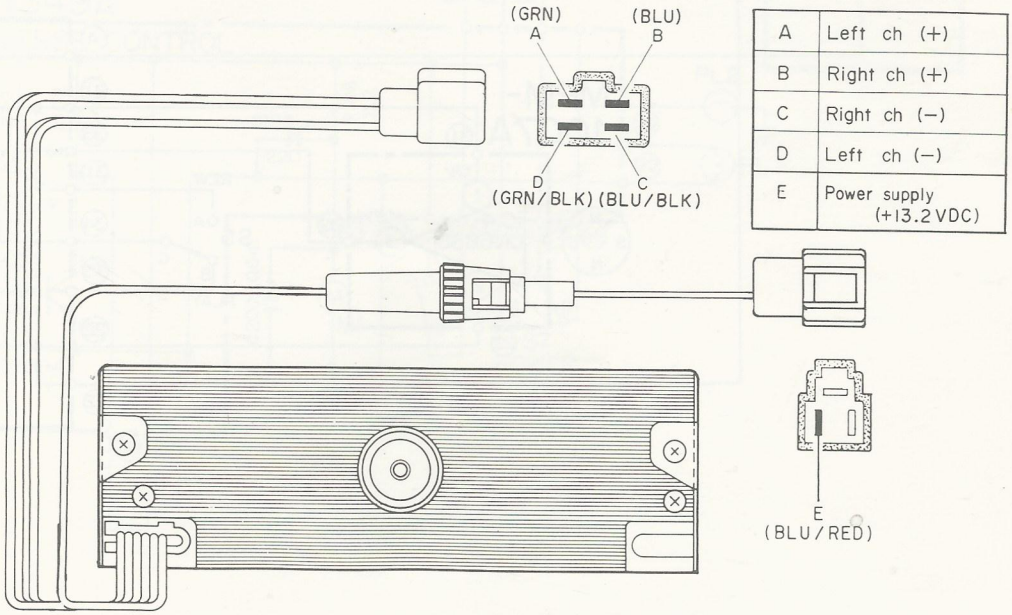

A	Left ch (+)
B	Right ch (+)
C	Right ch (−)
D	Left ch (−)
E	Power supply (+13.2VDC)

Fig. 1 (C23272251)

ADJUSTMENT FOR TAKE-UP TORQUE

1. Measure the take-up torque by inserting the torque gauge cartridge into the slip mechanism.
2. The torque should be always between **40** and **70** g-cm. The roller has five positions for the spring to be set.
3. Set the spring in one of ①—⑤ positions for the sufficient value. The take-up torque may vary 5 g-cm per one step of the roller.

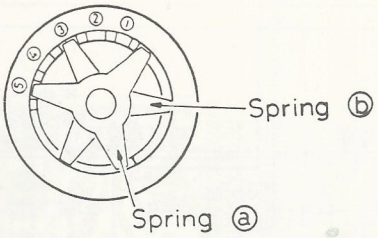

Fig. 4

PLAYBACK HEAD ADJUSTMENT (Azimuth)

1. Carefully adjust the azimuth adjust screw for maximum volume and treble tone without using test instrument.
2. If test tape is not available, use a stereo tape with some high treble tones and follow the same procedure as outlined above.

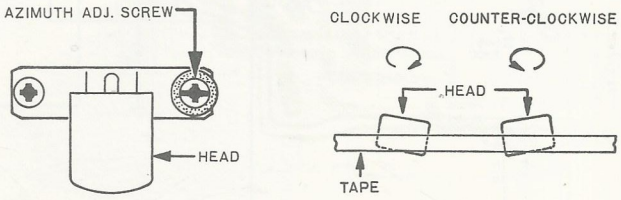

Fig. 5

BELT REPLACEMENT

1. Remove two screws (2×4mm) fixing PC board in lower part of deck.
2. Remove two flat screws [1] (2.6×3mm) and cover, then belt [A] can be replaced.
3. Remove E ring [2] and spring [3] than belt [B] can be replaced.

MOTOR REPLACEMENT

Remove two screws [4] (2.6×3mm) and belt, then motor can be replaced.

SLIP MECHANISM REPLACEMENT

Remove E ring, washer [5] and belt, then slip mechanism can be replaced.

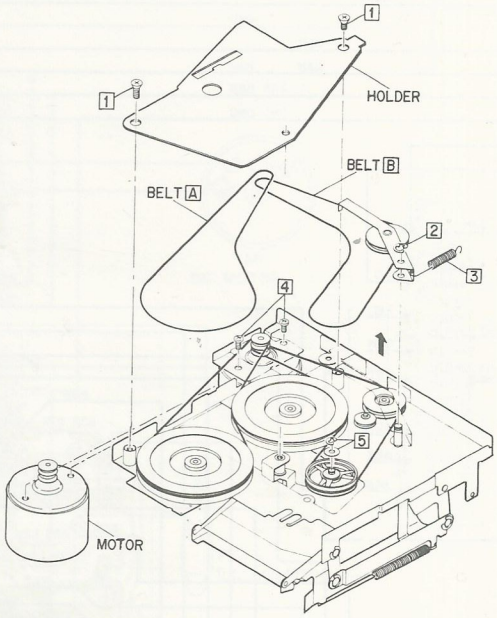

Fig. 6

HEAD REPLACEMENT

1. Remove screws [5] (2.6×2mm) and [6] (2.6×3mm).
2. Remove screw [9] (2.6×3mm) fixing PC board and holder unit.
3. Remove screw [7] (2×4mm) fixing head and special screw [8] (2×6mm).
   Unsolder flexible PC board, then head can be replaced.

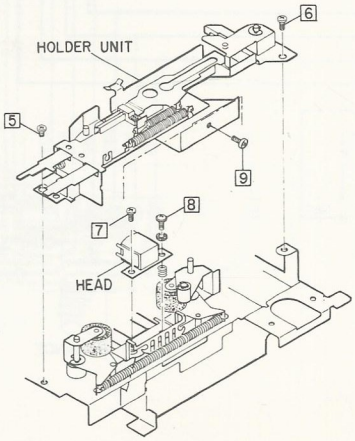

Fig. 7

EXPLODED VIEW

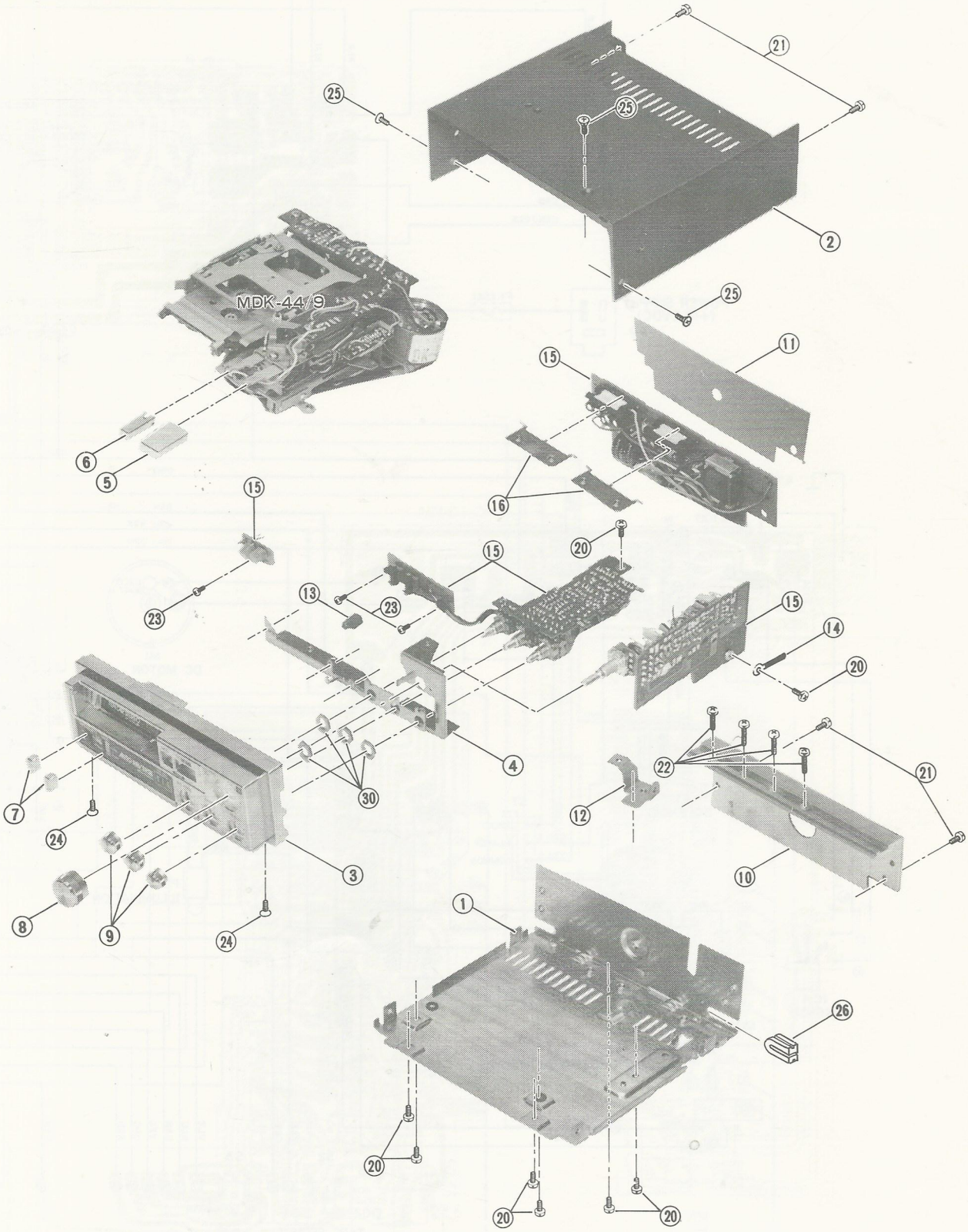

Fig. 8

EXPLODED VIEW (CASSETTE DECK MDK-44/9)

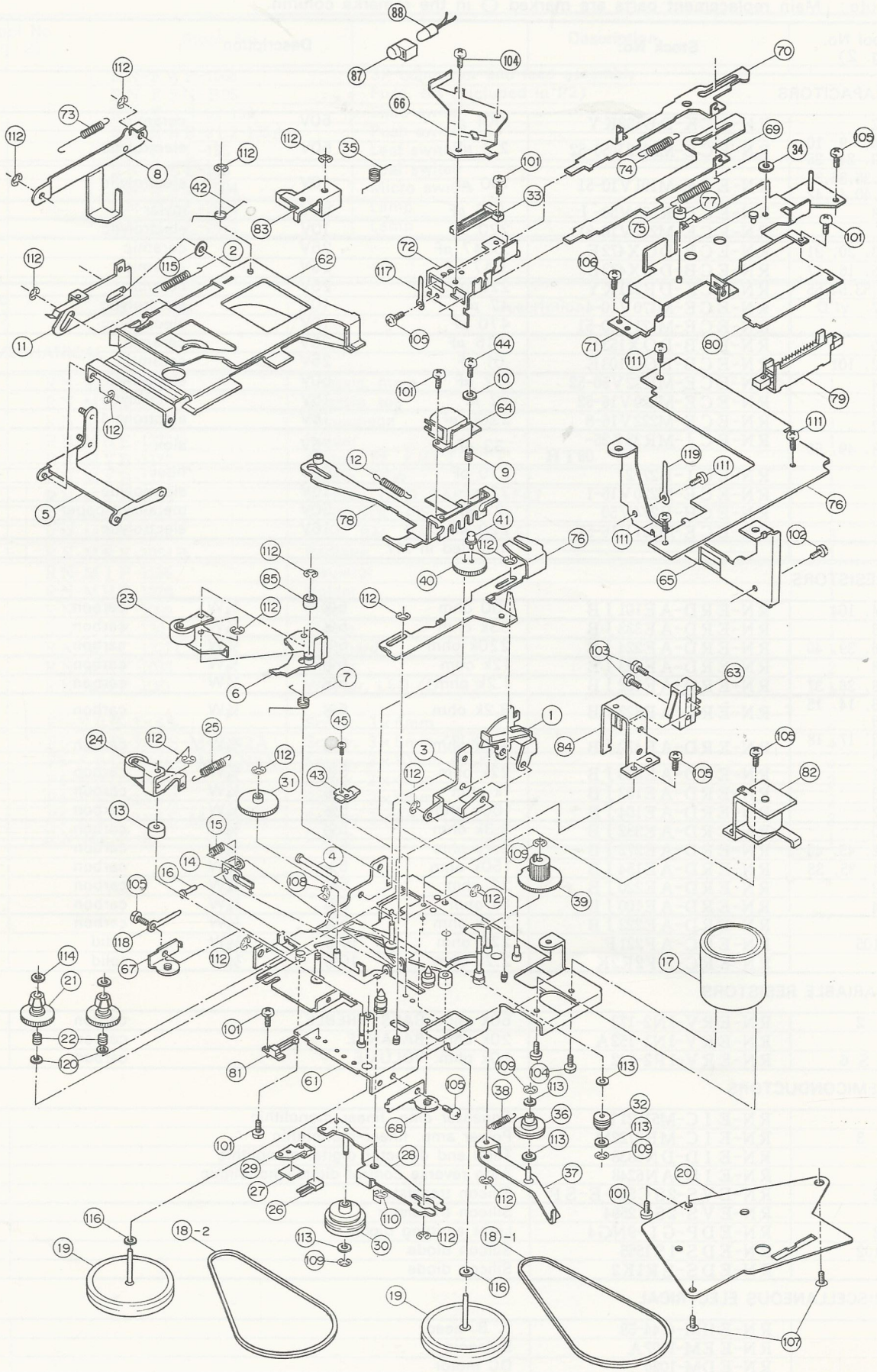

Fig. 9 (C28272250)

CASSETTE DECK UNIT (MDK-44/9)

Illus. No. (Fig. 9)	Stock No.	Description	Q'ty	Remark
1	RN-MUL-273B	Lever	1	
2	RN-MSC-293	Spring	1	
3	RN-MUL-257B	Lever	1	
4	RN-MSI-251A	Shaft	1	
5	RN-MUL-272B	Lever	1	
6	RN-MUL-1114A	Lever	1	
7	RN-MSC-295	Spring	1	
8	RN-MUL-260B	Lever	1	
9	RN-MSC-221	Spring	1	
10	RN-MST-138	Spacer	1	
11	RN-MUL-274	Lever	1	
12	RN-MSC-296A	Spring	1	
13	RN-MRP-1017	Roller	1	
14	RN-MUC-22A	Cum	1	
15	RN-MSC-297	Spring	1	
16	RN-MSI-216	Shaft	1	
17	RN-EDM-1026	Motor (M1)	1	
18—1	RN-MUB-32A	Belt	1	O
18—2	RN-MUB-1005	Belt	1	O
19	RN-MUF-1001	Flywheel	2	
20	RN-MHF-107C	Holder	1	
21	RN-MRP-1052A	Roller	2	
22	RN-MSC-298	Spring	2	
23	RN-MKR-12A	Pinchroller assy.	1	
24	RN-MKR-13B	Pinchroller assy.	1	
25	RN-MSC-299	Spring	1	
26	RN-EID-DN6838	IC (IC3)	1	O
27	RN-MPM-1007A	PC board	1	
28	RN-MHE-680D	Holder	1	
29	RN-MSE-187B	Spacer	1	
30	RN-MKS-18C	Slip mechanism	1	
31	RN-MUG-24	Gear	1	
32	RN-MRP-215	Roller	1	
33	RN-ESL-163	Leaf switch (S5)	1	O
34	RN-MWS-110	Washer	1	
35	RN-MSC-301	Spring	1	
36	RN-MUG-25	Gear	1	
37	RN-MUL-265B	Lever	1	
38	RN-MSC-303	Spring	1	
39	RN-MUG-26B	Gear	1	
40	RN-MUG-27	Gear	1	
41	RN-MSI-219	Shaft	1	
42	RN-MSC-268	Spring	1	
43	RN-MSP-166	Spring	1	
44	RN-MET-233A	Special screw	1	
45	RN-MET-1130	Special screw	1	
61	RN-MAD-1003E	Chassis	1	
62	RN-MHE-1062	Holder	1	
63	RN-ESM-1004	Micro switch (S7)	1	O
64	RN-EHM-C44-59	P. B. head	1	O
65	RN-MHE-1210C	Holder	1	
66	RN-MHE-1275	Holder	1	
67	RN-MHL-1003B	Holder	1	
68	RN-MHL-1004B	Holder	1	
69	RN-MUL-270A	Lever	1	
70	RN-MUL-261A	Lever	1	
71	RN-MHE-1246	Holder	1	
72	RN-MHL-204A	Holder	1	
73	RN-MSC-317B	Spring	1	
74	RN-MSC-302	Spring	1	
75	RN-MSC-1019	Spring	1	
76	RN-MUL-264	Lever	1	
77	RN-MRP-220	Roller	1	
78	RN-MHE-1305	Holder	1	
79	RN-ESS-62-159	Slide switch (S1)	1	O
80	RN-MPM-2591	PC board	1	
81	RN-ESL-155	Leaf switch (S4)	1	O
82	RN-EEM-1007A	Solenoid (E1)	1	
83	RN-MUL-1004	Cum	1	

Illus. No. (Fig. 9)	Stock No.	Description	Q'ty	Remark
84	RN-MHE-1153A	Holder	1	
85	RN-MRP-1033	Roller	1	
86	RN-MPC-1349A	PC board	1	
87	RN-MLF-1069	Filter	1	
88	RN-EPL-70-2	Lamp (PL2)	1	
ASSEMBLY METARIAL				
101	F6-SBD-2×4S	Screw, 2×4mm	6	
102	F6-SBD-2.6×5S	Screw, 2.6×5mm	1	
103	F6-SBD-2.3×10S	Screw, 2.3×10mm	2	
104	F6-SBD-2.6×3S	Screw, 2.6×3mm	3	
105	F6-SBD-2.6×4S	Screw, 2.6×4mm	6	
106	F6-SNA-2.6×3S	Screw, 2.6×3mm	1	
107	F6-SSA-2.6×5S	Screw, 2.6×5mm	2	
108	F6-ER-1.2	E-type ring	1	
109	F6-ER-1.5	E-type ring	4	
110	F6-ER-3	E-type ring	1	
111	F6-SBD-3×5S	Spring, 3×5mm	4	
112	RN-MHJ-3	E-type ring	17	
113	RN-MWP-78	Washer	5	
114	RN-MWP-80A	Washer	2	
115	RN-MWP-84	Washer	1	
116	RN-MWP-1053	Washer	2	
117	RN-MCF-17	Clamp	1	
118	RN-MCC-55	Clamp	1	
119	RN-MCF-15	Clamp	1	
120	RN-MWP-79	Washer	2	

NOTE: Specifications subject to change without prior notice.

SCHEMATIC

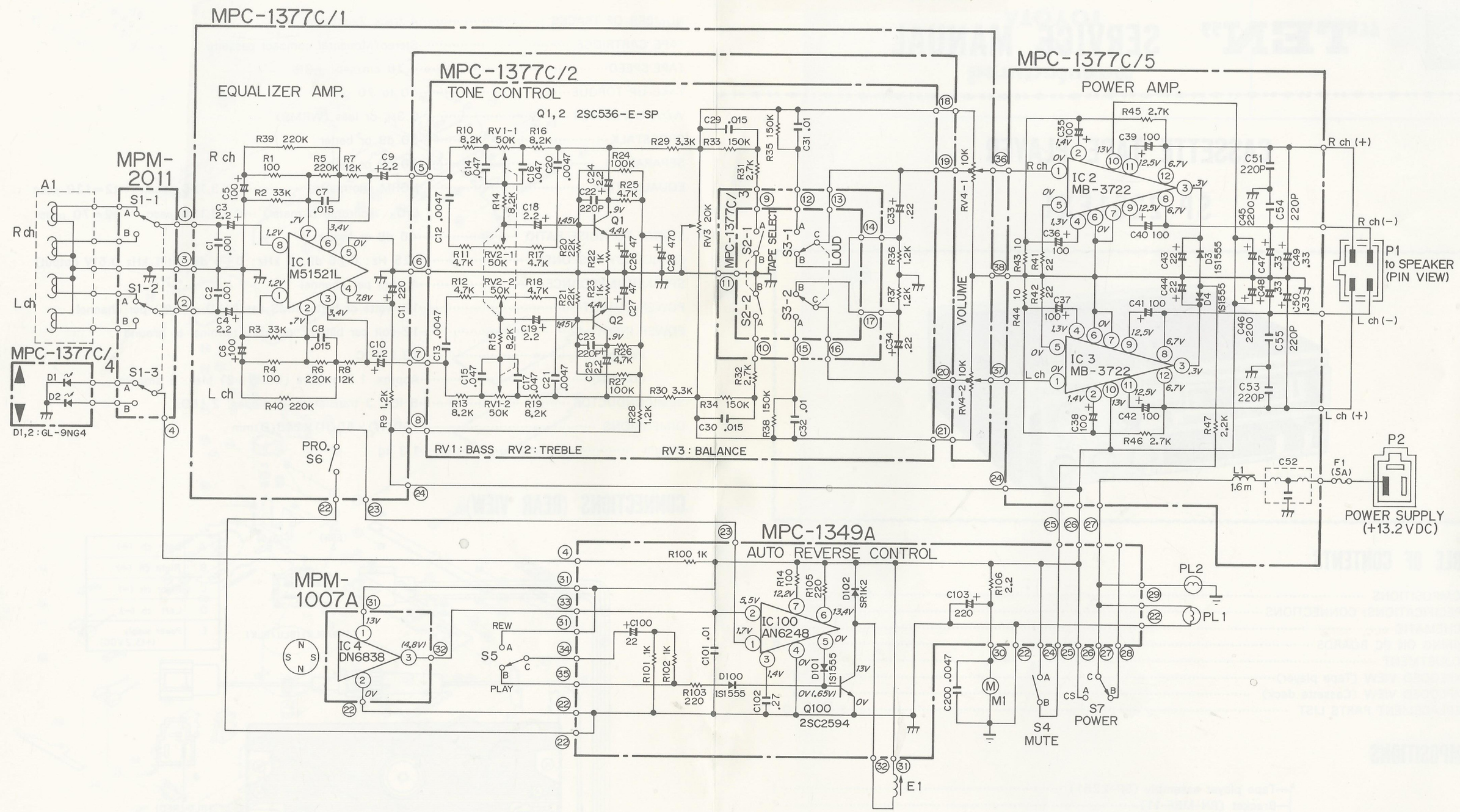

Fig. 2 (C24272251)

NOTES:

1. All capacitance in farad, $\mu=10^{-6}$, $P=10^{-12}$
2. All resistance in ohm, $K=10^{3}$
3. All inductance in henly, $m=10^{-3}$, $\mu=10^{-6}$
4. DC voltage against the chassis measured with 100k ohm/volt meter, power supply set at +13.2 VDC, no signal input.

WIRING ON PC BOARDS

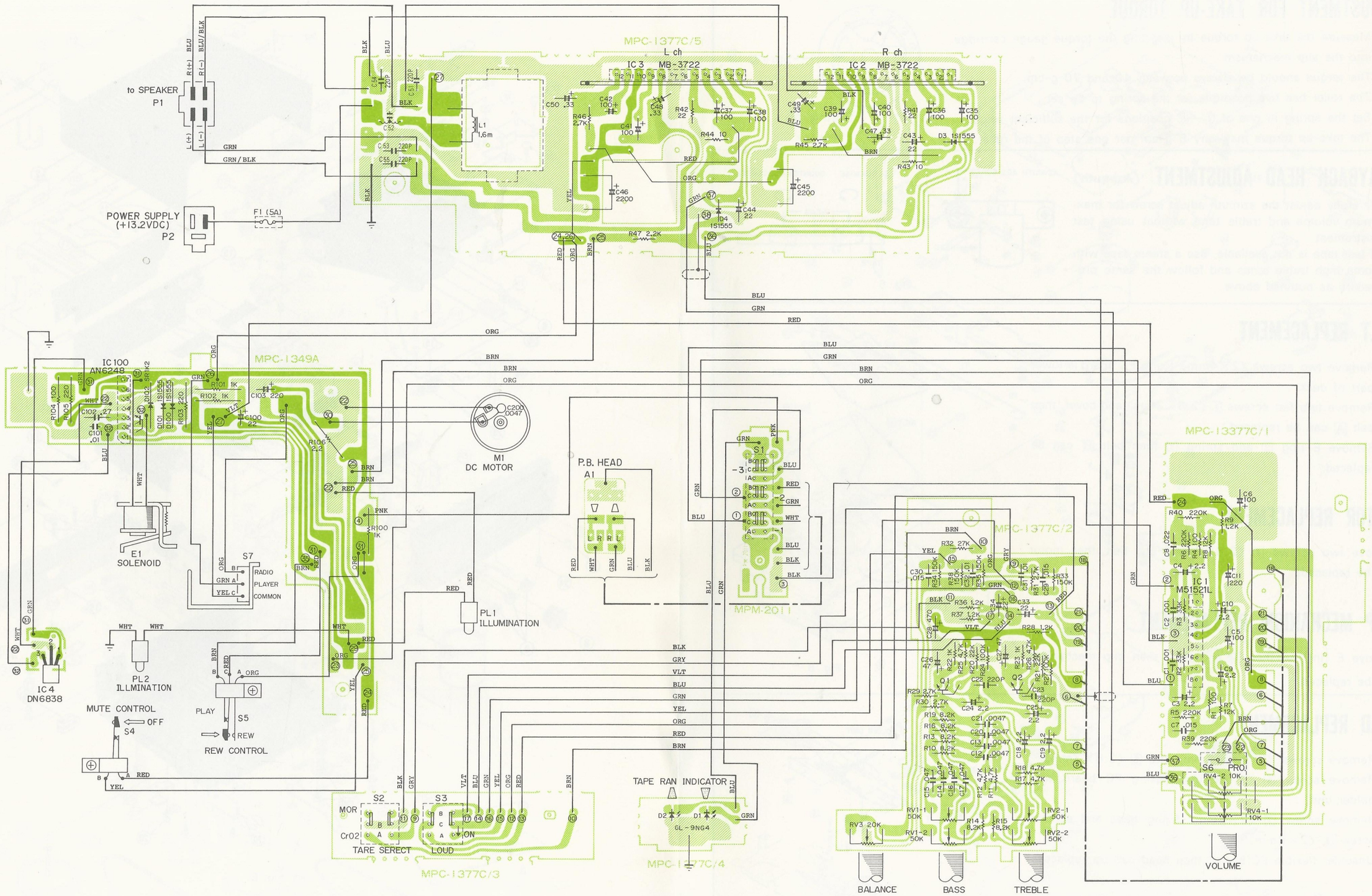

Fig. 3 (C27272251)